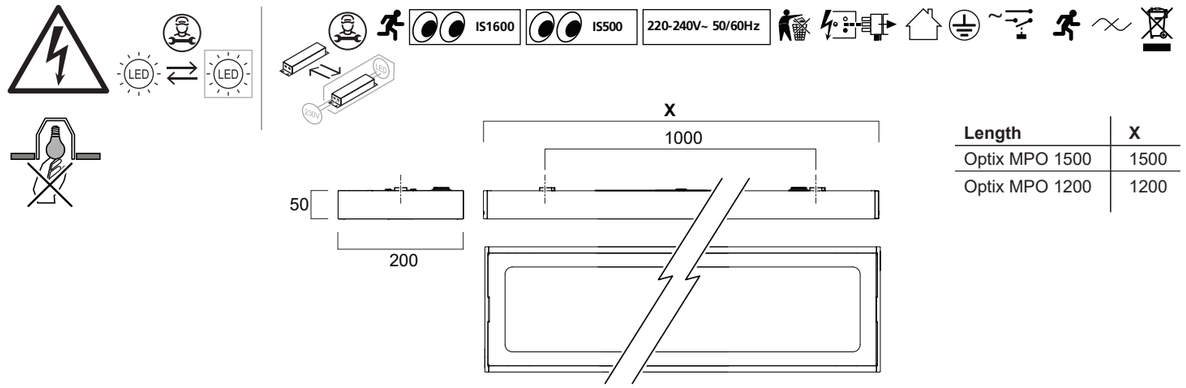

Length	X
Optix MPO 1500	1500
Optix MPO 1200	1200

1

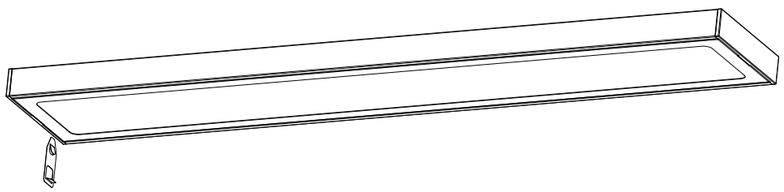

2

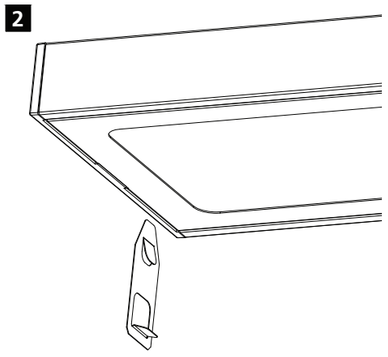

3

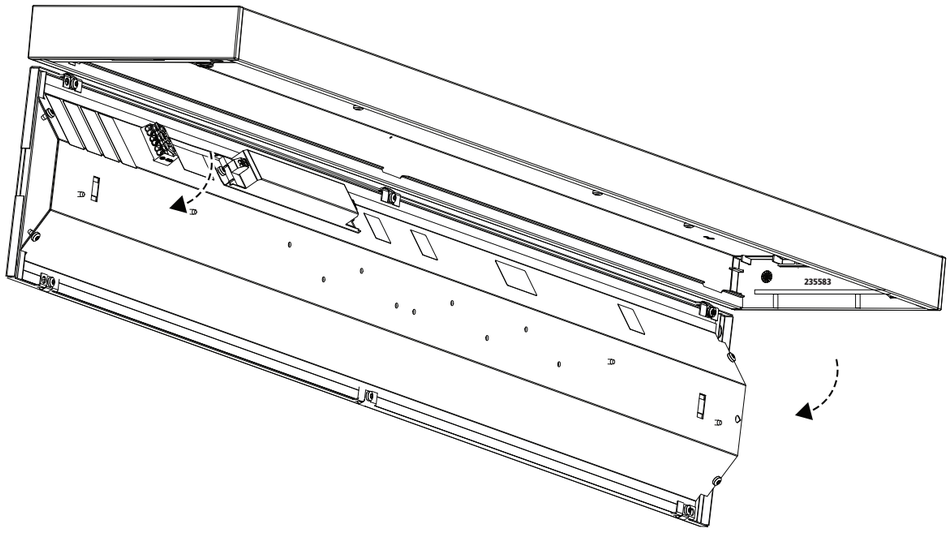

12

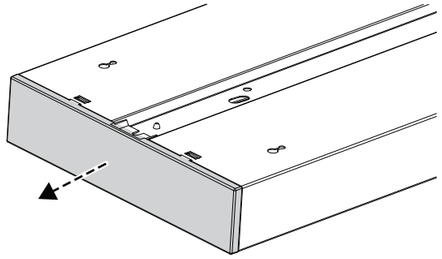

13

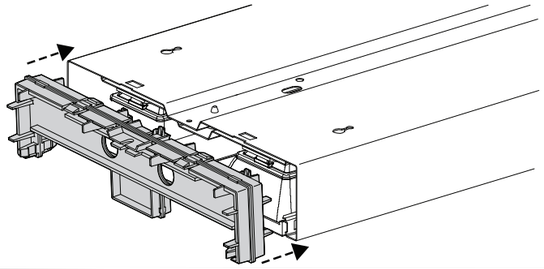

14

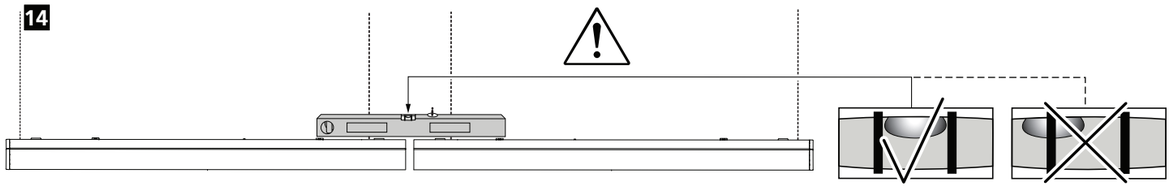

15

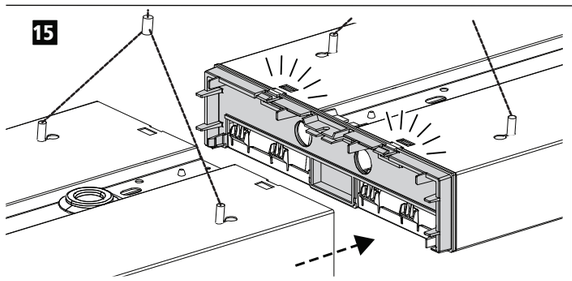

16

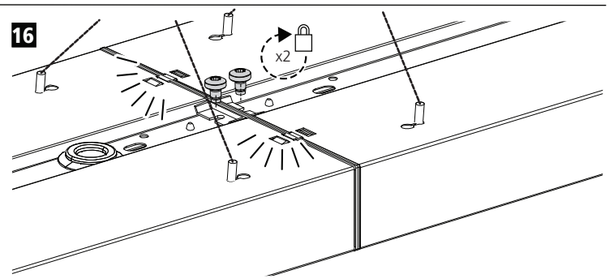

17

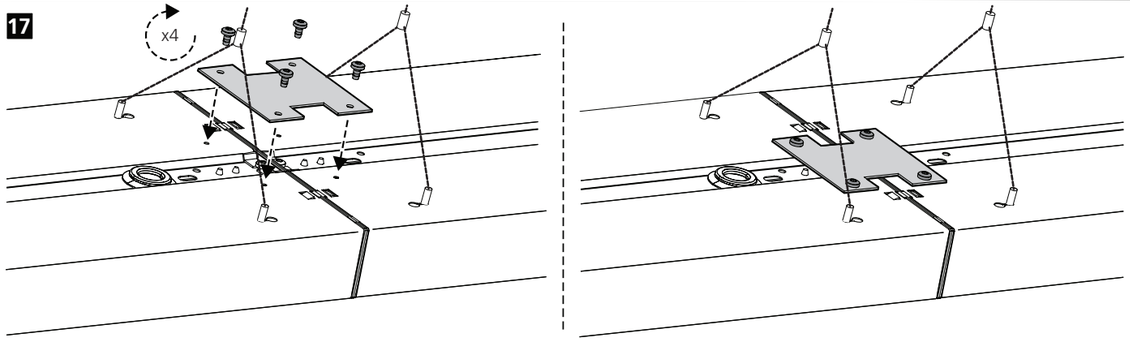

!

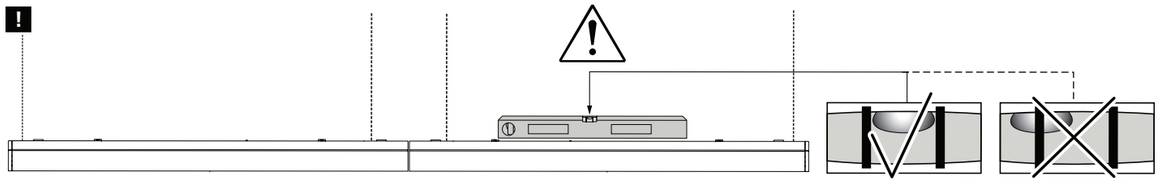

© Feilo Sylvania Europe Limited 08.23

4

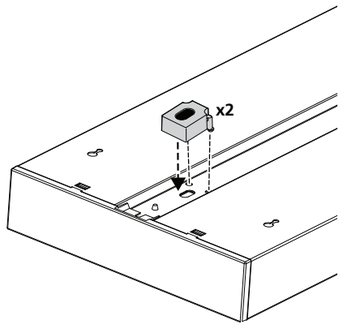

5

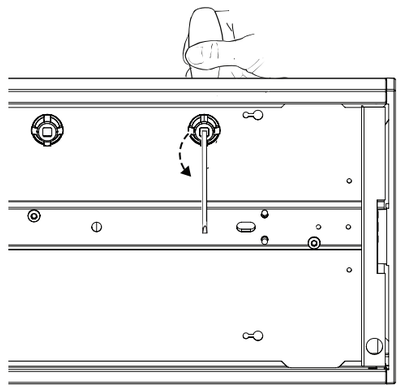

6

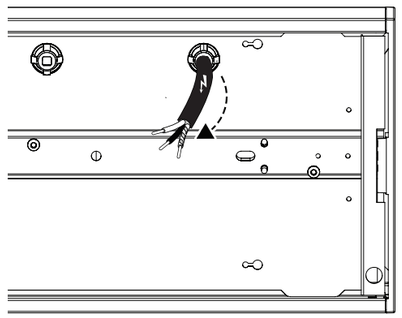

7

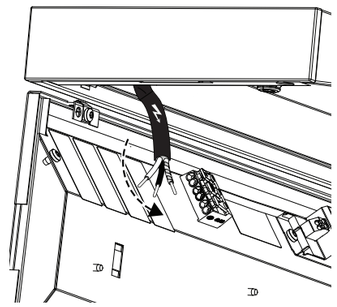

8 220-240V~ /+SSA / +SSC

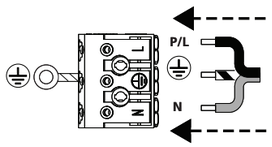

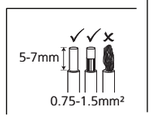

8 220-240V~ + DALI + Switch-Control

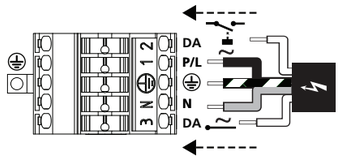

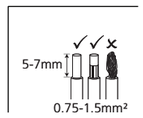

8 220-240V~ +

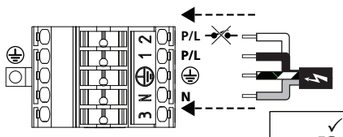

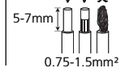

8 220-240V~ + + DALI

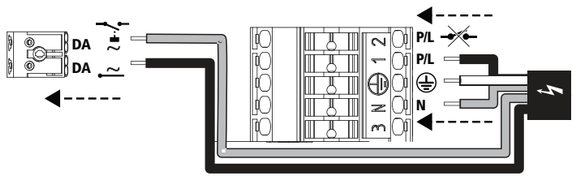

9
Optix Linear Suspended

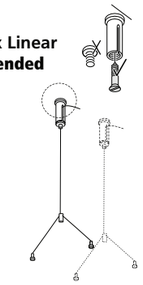

a

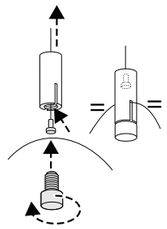

b

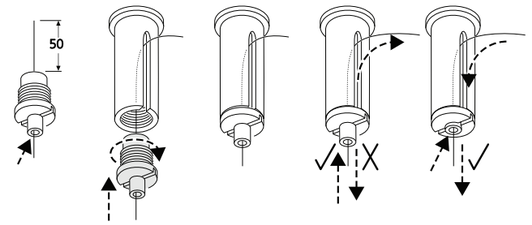

10

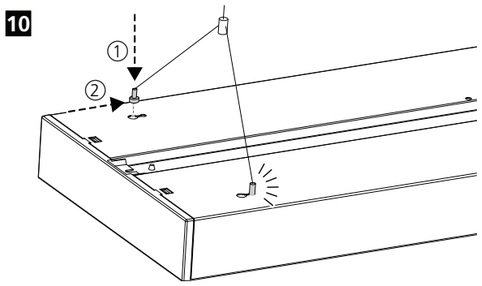
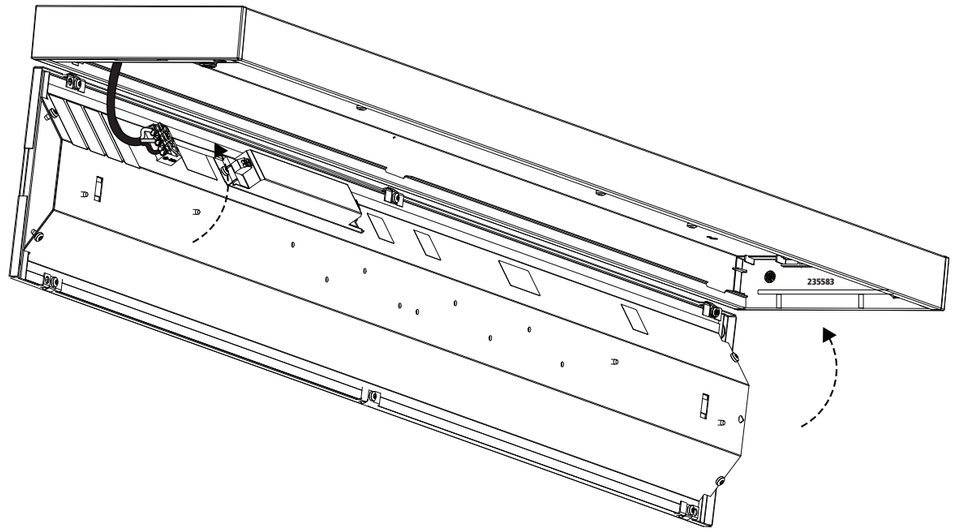
11